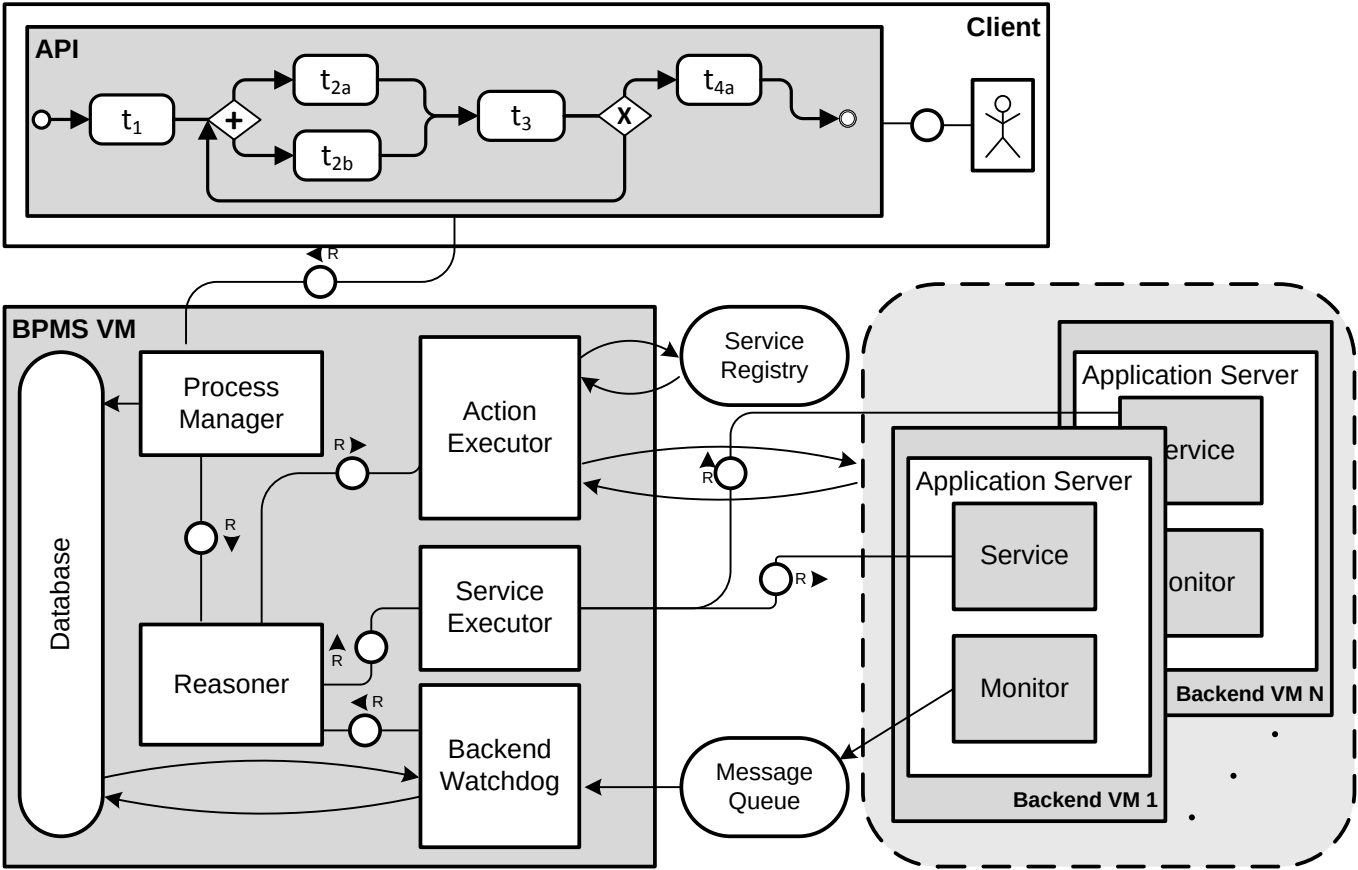
Client
API
t1
t2a
t2b
t3
t4a
BPMS VM
Database
Process Manager
Action Executor
Service Registry
Service Executor
Reasoner
Backend Watchdog
Message Queue
Application Server
Service
Monitor
Backend VM 1
Backend VM N
R